# Calculation and Selection Result

## A.Project Overview

| | |
|---|---|
| Project Name | USC Płock |
| Country | Poland |
| City | Gdańsk |
| Address | |
| Client Name | |
| Client Address | |
| Reference | |
| Revision | |
| Project Date | 9 / 18 / 2019 |
| Altitude | m |
| Cooling Condition: Indoor Dry-bulb | 27.0 °C |
| Cooling Condition: Indoor Wet-bulb | 19.0 °C |
| Cooling Condition: Outdoor Dry-bulb | 28.0 °C |
| Cooling condition: Outdoor wet bulb | 25.0 °C |
| Heating Condition: Indoor Dry-bulb | 20.0 °C |
| Heating Condition: Outdoor Dry-bulb | -16.0 °C |
| Heating Condition: Outdoor Wet-bulb | -16.3 °C |

## B.Material List

| Model | Quantity | Description |
|---|---|---|
| MDV-V120W/DRN1 | 1 | All DC Inverter Mini VRF (380V) |
| MI2-36GDN1 | 6 | Wall_mounted (2nd DC IDU) |
| MI2-56GDN1 | 7 | Wall_mounted (2nd DC IDU) |
| MDV-V260W/DRN1 | 2 | DC Inverter Individual VRF (380V 20-45kW) |
| FQZHN-01D | 8 | Branch Joint |
| FQZHN-02D | 2 | Branch Joint |
| Ø22.2 | 25.0 m | Copper Pipe |
| Ø19.1 | 6.0 m | Copper Pipe |
| Ø15.9 | 48.5 m | Copper Pipe |
| Ø12.7 | 18.5 m | Copper Pipe |
| Ø9.53 | 79.5 m | Copper Pipe |

| Model | Quantity | Description |
|---|---|---|
| Ø6.35 | 18.5 m | Copper Pipe |
| WDC-86E/KD | 13 | 2nd generation wired controller |

# System1

## 1.1 Material List

| Model | Quantity | Description |
|---|---|---|
| MDV-V120W/DRN1 | 1 | All DC Inverter Mini VRF (380V) |
| MI2-36GDN1 | 2 | Wall_mounted (2nd DC IDU) |
| MI2-56GDN1 | 1 | Wall_mounted (2nd DC IDU) |
| FQZHN-01D | 2 | Branch Joint |
| WDC-86E/KD | 3 | 2nd generation wired controller |
| Ø15.9 | 24.5 m | Copper Pipe |
| Ø12.7 | 9.5 m | Copper Pipe |
| Ø9.53 | 24.5 m | Copper Pipe |
| Ø6.35 | 9.5 m | Copper Pipe |

## 1.2 Indoor Unit Specifications

| IDU Name | Model | Sound (dB(A)) | Weight(kg) | Dimension(mm) W x H x D | Power Supply | Rated Power(W) | MCA(A) | MFA(A) |
|---|---|---|---|---|---|---|---|---|
| 0-24 | MI2-36GDN1 | 33(SSH) | 11.40 | 990*315*223 | 220-240,50,1 | 30 | N/A | N/A |
| 0-27 | MI2-56GDN1 | 38(SSH) | 12.80 | 990*315*223 | 220-240,50,1 | 45 | N/A | N/A |
| 0-28 | MI2-36GDN1 | 33(SSH) | 11.40 | 990*315*223 | 220-240,50,1 | 30 | N/A | N/A |

| IDU Name | Model | Cooling AT (°C) | Req.TC (kW) | TC (kW) | Req.SC (kW) | SC (kW) | Heating AT (°C) | Req.HC (kW) | HC (kW) | Air flow (m^3/h) | ESP (Pa) |
|---|---|---|---|---|---|---|---|---|---|---|---|
| 0-24 | MI2-36GDN1 | 27.0/19.0 | 0.00 | 3.49 | 0.00 | 2.32 | 20.0 | 0.00 | 2.49 | 656(SSH) | N/A |
| 0-27 | MI2-56GDN1 | 27.0/19.0 | 0.00 | 5.43 | 0.00 | 3.30 | 20.0 | 0.00 | 3.92 | 747(SSH) | N/A |
| 0-28 | MI2-36GDN1 | 27.0/19.0 | 0.00 | 3.49 | 0.00 | 2.32 | 20.0 | 0.00 | 2.49 | 656(SSH) | N/A |

# 1.3 Outdoor Unit Specifications

| Name | Model | Module | Dimension(mm) | Weight(kg) | Base refr(kg) | Add refr(kg) | Power Supply | MCA(A) | MFA(A) |
|---|---|---|---|---|---|---|---|---|---|
| ODU1 | MDV-V120W/DRN1 | MDV-V120W/DRN1 | 900*1327*400 | 95.00 | 3.30 | 1.81 | 380~415V~50Hz~3ph | N/A | N/A |

| Name | Model | CR% | Temp(°C) | CC(kW) | Req CC(kW) | Temp(H/RH)(°C) | HC(kW) | Req HC(kW) |
|---|---|---|---|---|---|---|---|---|
| ODU1 | MDV-V120W/DRN1 | 104.07 | 28.0 | 12.43 | 0.00 | -16.0/86% | 8.91 | 0.00 |

| Name | Model | EER | COP | Cooling Power(kW) | Heating Power(kW) |
|---|---|---|---|---|---|
| ODU1 | MDV-V120W/DRN1 | 4.68 | 2.58 | 2.71 | 3.48 |

Req.TC: Required Total Cooling Capacity
Req.SC: Required Sensible Cooling Capacity
Req.HC: Required Total Heating Capacity
TC: Available Total Cooling Capacity
SC: Available Sensible Cooling Capacity
HC: Available Total Heating Capacity
AT: Ambient Temperature
ESP: External Static Pressure
Req.CC: Required Cooling Capacity
CC: Available Cooling Capacity

# 1.4 Piping and Mode Selection Devices

| | |
|---|---|
| IDU Quantity | 3/6 |
| Combination Ratio | 104.07% |
| Additional refrigerant charge | 1.81 kg<br>= 9.50(6.35) * 0.022 + 24.50(9.53) * 0.057 + 2 * 0.1 |
| Factory refrigerant charge | 3.30 kg |
| Total refrigerant charge | 5.11 kg |
| Total Pipe Length | 35 m / 100 m |
| Furthest Actual | 28 m / 60 m |
| Furthest Equivalent | 29 m / 70 m |
| Furthest Equivalent from First Branch to IDU | 8.5 m / 20 m |
| Drop Height between IDU and IDU | 0 m / 8 m |
| Drop height between IDU and ODU(Below ODU) | 3 m / 30 m |
| Available Capacity Cooling | 12.43 kW |
| Available Capacity Heating | 8.91 kW |

Note:

1.The equivalent length of each branch joint is 0.5m.

Pipe

| No. | Length | Gas Pipe | Liquid Pipe |
|---|---|---|---|
| (1) | 20.0 m | Ø15.9 | Ø9.53 |
| (2) | 2.0 m | Ø12.7 | Ø6.35 |
| (3) | 0.5 m | Ø15.9 | Ø9.53 |
| (4) | 4.0 m | Ø15.9 | Ø9.53 |
| (5) | 7.5 m | Ø12.7 | Ø6.35 |

Branch Joint

| No. | Load kW | Model |
|---|---|---|
| (1) | 12.80 | FQZHN-01D |
| (2) | 9.20 | FQZHN-01D |

# 1.5 Piping Diagram

## VRF 50Hz R410A

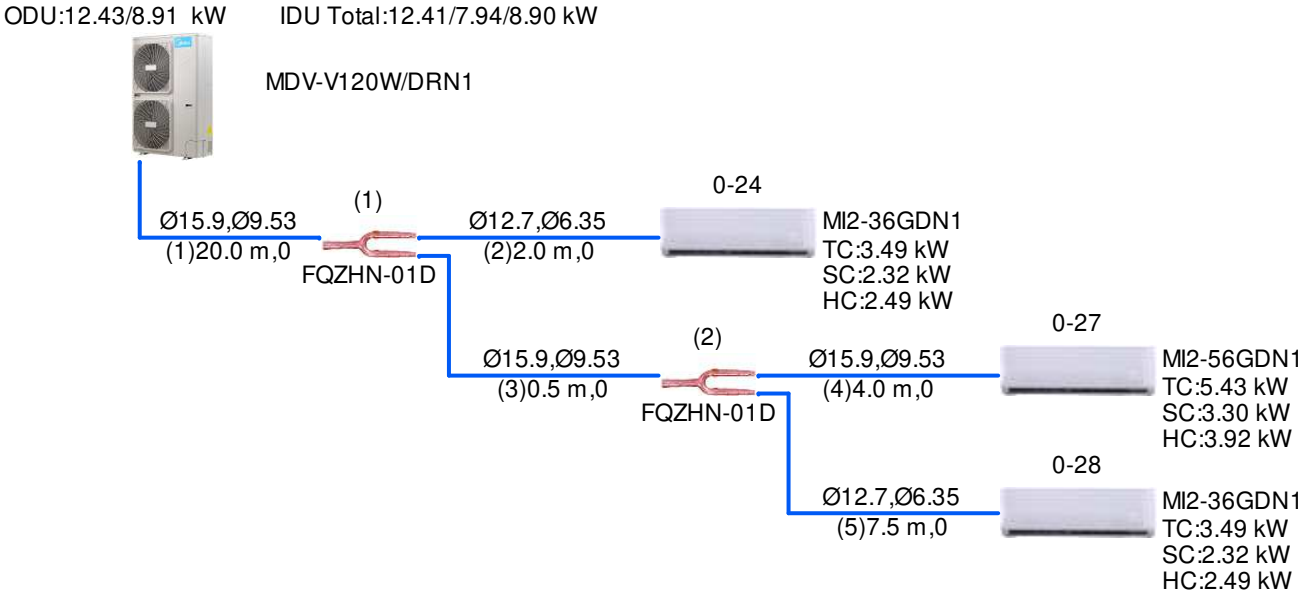


The piping size may be different with the actual situation because of the software's illustration limitation, please confirm the piping size according to the installation manual before installation.

# 1.6 Wiring Diagram

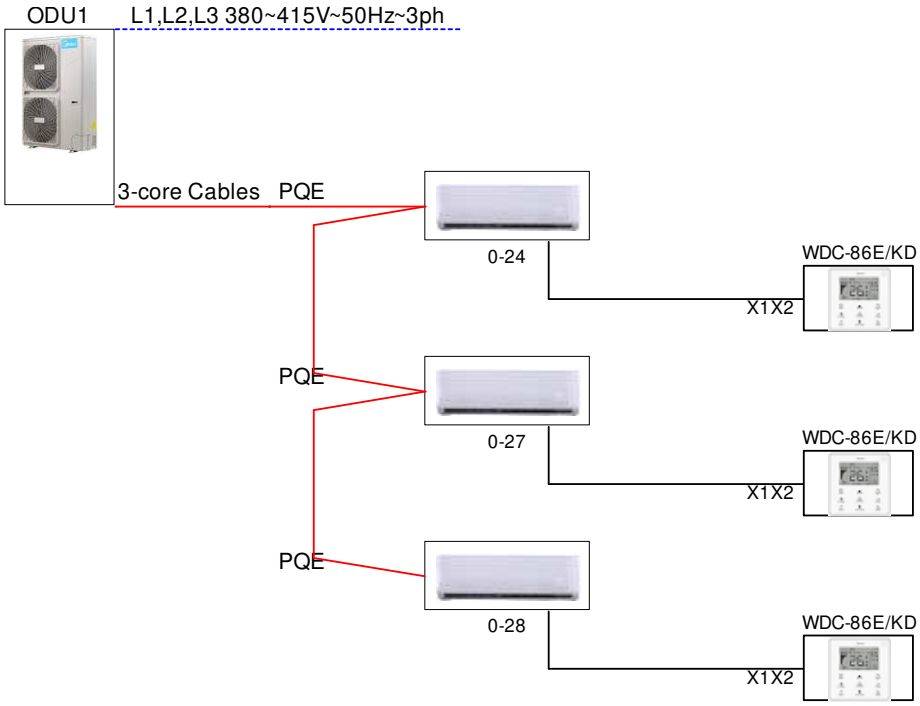


The wiring diagram may be different with the actual situation because of software's illustration limitation, please confirm the wiring diagram according to the installation manual before installation.

# System2

## 2.1 Material List

| Model | Quantity | Description |
|---|---|---|
| MDV-V260W/DRN1 | 1 | DC Inverter Individual VRF (380V 20-45kW) |
| MI2-56GDN1 | 3 | Wall_mounted (2nd DC IDU) |
| MI2-36GDN1 | 2 | Wall_mounted (2nd DC IDU) |
| FQZHN-02D | 1 | Branch Joint |
| FQZHN-01D | 3 | Branch Joint |
| WDC-86E/KD | 5 | 2nd generation wired controller |
| Ø22.2 | 6.0 m | Copper Pipe |
| Ø19.1 | 3.0 m | Copper Pipe |
| Ø15.9 | 12.0 m | Copper Pipe |
| Ø12.7 | 4.5 m | Copper Pipe |
| Ø9.53 | 21.0 m | Copper Pipe |
| Ø6.35 | 4.5 m | Copper Pipe |

## 2.2 Indoor Unit Specifications

| IDU Name | Model | Sound (dB(A)) | Weight(kg) | Dimension(mm) W x H x D | Power Supply | Rated Power(W) | MCA(A) | MFA(A) |
|---|---|---|---|---|---|---|---|---|
| 1-16 | MI2-56GDN1 | 38(SSH) | 12.80 | 990*315*223 | 220-240,50,1 | 45 | N/A | N/A |
| 1-16 | MI2-56GDN1 | 38(SSH) | 12.80 | 990*315*223 | 220-240,50,1 | 45 | N/A | N/A |
| 1-17 | MI2-56GDN1 | 38(SSH) | 12.80 | 990*315*223 | 220-240,50,1 | 45 | N/A | N/A |
| 1-18 | MI2-36GDN1 | 33(SSH) | 11.40 | 990*315*223 | 220-240,50,1 | 30 | N/A | N/A |
| 1-19 | MI2-36GDN1 | 33(SSH) | 11.40 | 990*315*223 | 220-240,50,1 | 30 | N/A | N/A |

| IDU Name | Model | Cooling AT (°C) | Req.TC (kW) | TC (kW) | Req.SC (kW) | SC (kW) | Heating AT (°C) | Req.HC (kW) | HC (kW) | Air flow (m^3/h) | ESP (Pa) |
|---|---|---|---|---|---|---|---|---|---|---|---|
| 1-16 | MI2-56GDN1 | 27.0/19.0 | 0.00 | 5.50 | 0.00 | 3.34 | 20.0 | 0.00 | 4.60 | 747(SSH) | N/A |
| 1-16 | MI2-56GDN1 | 27.0/19.0 | 0.00 | 5.50 | 0.00 | 3.34 | 20.0 | 0.00 | 4.60 | 747(SSH) | N/A |
| 1-17 | MI2-56GDN1 | 27.0/19.0 | 0.00 | 5.48 | 0.00 | 3.33 | 20.0 | 0.00 | 4.57 | 747(SSH) | N/A |
| 1-18 | MI2-36GDN1 | 27.0/19.0 | 0.00 | 3.51 | 0.00 | 2.34 | 20.0 | 0.00 | 2.88 | 656(SSH) | N/A |
| 1-19 | MI2-36GDN1 | 27.0/19.0 | 0.00 | 3.49 | 0.00 | 2.32 | 20.0 | 0.00 | 2.87 | 656(SSH) | N/A |

## 2.3 Outdoor Unit Specifications

| Name | Model | Module | Dimension(mm) | Weight(kg) | Base refr(kg) | Add refr(kg) | Power Supply | MCA(A) | MFA(A) |
|---|---|---|---|---|---|---|---|---|---|
| ODU2 | MDV-V260W/DRN1 | MDV-V260W/DRN1 | 1120*1558*528 | 147.00 | 6.20 | 1.41 | 380-415V-3ph-50Hz | N/A | N/A |

| Name | Model | CR% | Temp(°C) | CC(kW) | Req CC(kW) | Temp(H/RH)(°C) | HC(kW) | Req HC(kW) |
|---|---|---|---|---|---|---|---|---|
| ODU2 | MDV-V260W/DRN1 | 92.31 | 28.0 | 25.58 | 0.00 | -16.0/86% | 19.69 | 0.00 |

| Name | Model | EER | COP | Cooling Power(kW) | Heating Power(kW) |
|---|---|---|---|---|---|
| ODU2 | MDV-V260W/DRN1 | 4.45 | 2.68 | 5.39 | 7.38 |

Req.TC: Required Total Cooling Capacity
Req.SC: Required Sensible Cooling Capacity
Req.HC: Required Total Heating Capacity
TC: Available Total Cooling Capacity
SC: Available Sensible Cooling Capacity
HC: Available Total Heating Capacity
AT: Ambient Temperature
ESP: External Static Pressure
Req.CC: Required Cooling Capacity
CC: Available Cooling Capacity

## 2.4 Piping and Mode Selection Devices

| | |
|---|---|
| IDU Quantity | 5/12 |
| Combination Ratio | 92.31% |
| Additional refrigerant charge | 1.41 kg<br>= 4.50(6.35) * 0.022 + 23.00(9.53) * 0.057 |
| Factory refrigerant charge | 6.20 kg |
| Total refrigerant charge | 7.61 kg |
| Total Pipe Length | 27.5 m / 120 m |
| Furthest Actual | 23.5 m / 60 m |
| Furthest Equivalent | 25.5 m / 70 m |
| Furthest Equivalent from First Branch to IDU | 19 m / 20(40) m |
| Drop Height between IDU and IDU | 0 m / 8 m |
| Drop height between IDU and ODU(Below ODU) | 3 m / 30 m |
| Available Capacity Cooling | 23.61 kW |
| Available Capacity Heating | 19.66 kW |

Note:

1.The equivalent length of each branch joint is 0.5m.

Pipe

| No. | Length | Gas Pipe | Liquid Pipe |
|---|---|---|---|
| (1) | 6.0 m | Ø22.2 | Ø9.53 |
| (2) | 3.0 m | Ø19.1 | Ø9.53 |
| (3) | 8.0 m | Ø15.9 | Ø9.53 |
| (4) | 2.5 m | Ø15.9 | Ø9.53 |
| (5) | 0.5 m | Ø15.9 | Ø9.53 |
| (6) | 0.5 m | Ø15.9 | Ø9.53 |
| (7) | 0.5 m | Ø15.9 | Ø9.53 |
| (8) | 0.5 m | Ø12.7 | Ø6.35 |
| (9) | 4.0 m | Ø12.7 | Ø6.35 |

Branch Joint

| No. | Load kW | Model |
|---|---|---|
| (1) | 24.00 | FQZHN-02D |
| (2) | 18.40 | FQZHN-01D |
| (3) | 12.80 | FQZHN-01D |
| (4) | 7.20 | FQZHN-01D |

# 2.5 Piping Diagram

**VRF 50Hz R410A**

ODU:25.58/19.69 kW IDU Total:23.58/14.74/19.64 kW

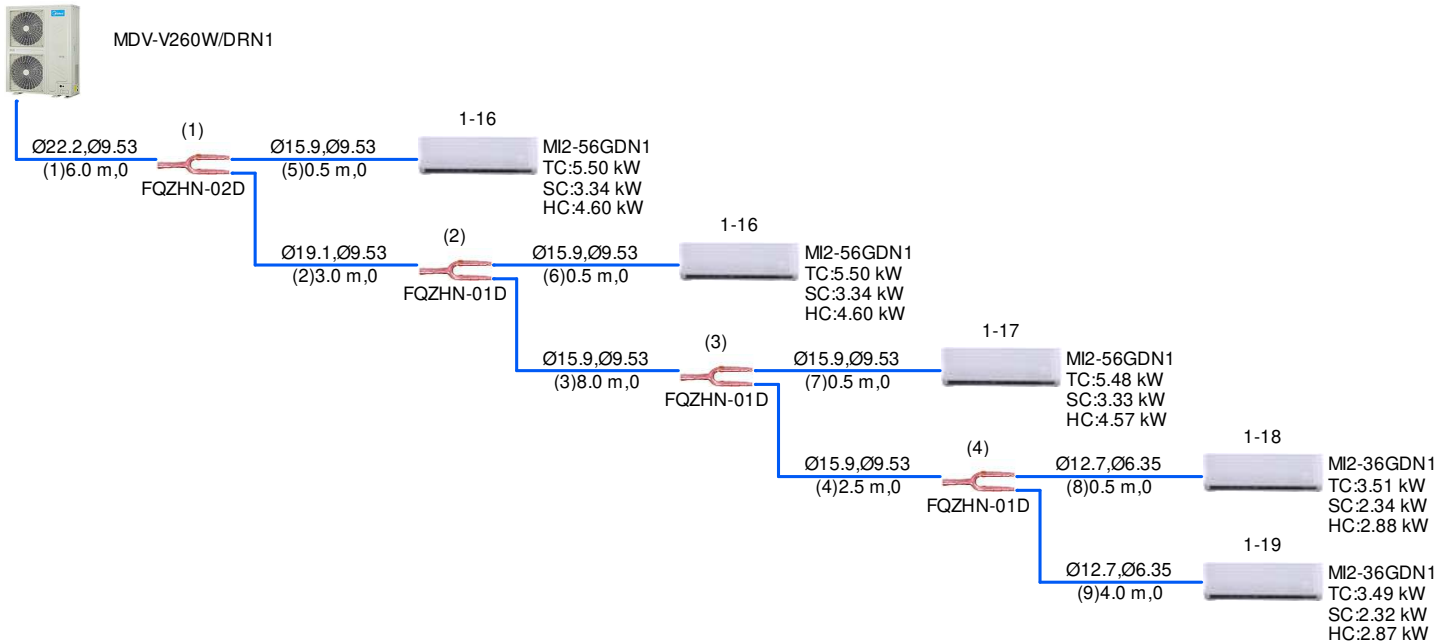


The piping size may be different with the actual situation because of the software's illustration limitation, please confirm the piping size according to the installation manual before installation.

## 2.6 Wiring Diagram

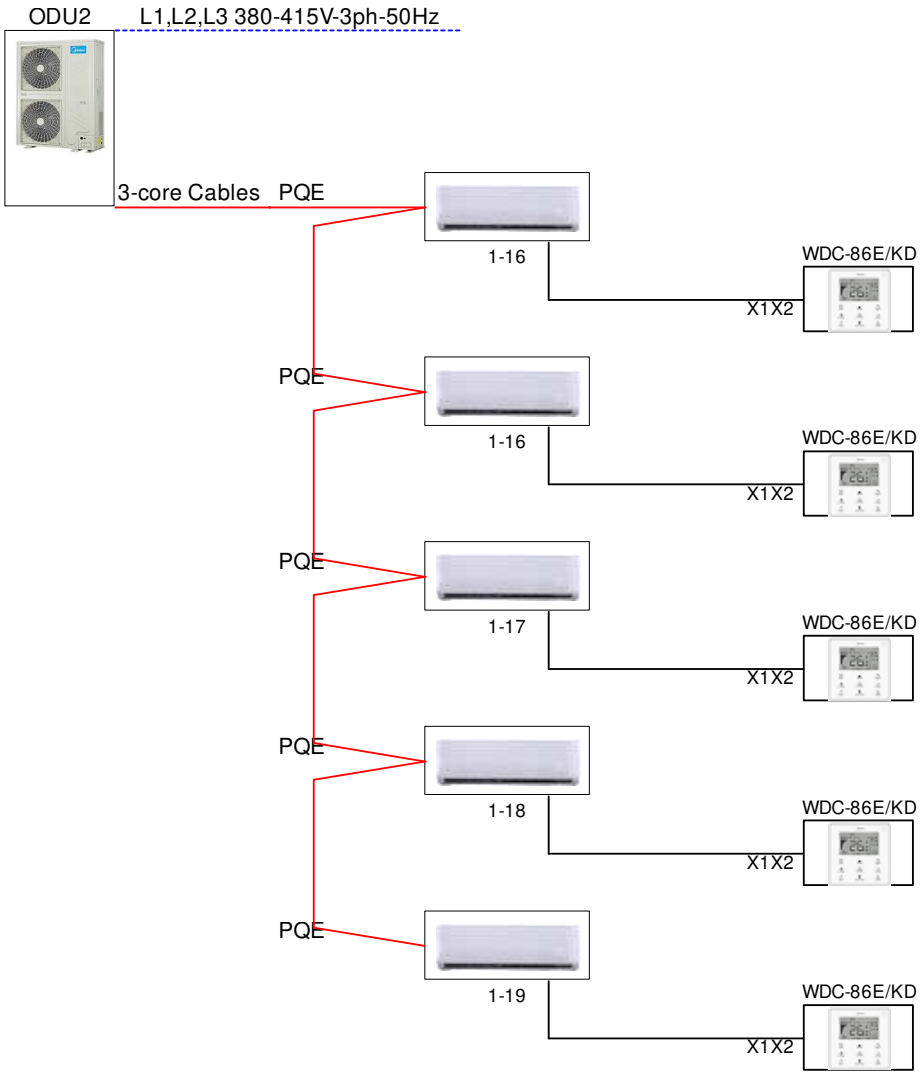


The wiring diagram may be different with the actual situation because of software's illustration limitation, please confirm the wiring diagram according to the installation manual before installation.

# System3

## 3.1 Material List

| Model | Quantity | Description |
|---|---|---|
| MDV-V260W/DRN1 | 1 | DC Inverter Individual VRF (380V 20-45kW) |
| MI2-36GDN1 | 2 | Wall_mounted (2nd DC IDU) |
| MI2-56GDN1 | 3 | Wall_mounted (2nd DC IDU) |
| FQZHN-02D | 1 | Branch Joint |
| FQZHN-01D | 3 | Branch Joint |
| WDC-86E/KD | 5 | 2nd generation wired controller |
| Ø22.2 | 19.0 m | Copper Pipe |
| Ø19.1 | 3.0 m | Copper Pipe |
| Ø15.9 | 12.0 m | Copper Pipe |
| Ø12.7 | 4.5 m | Copper Pipe |
| Ø9.53 | 34.0 m | Copper Pipe |
| Ø6.35 | 4.5 m | Copper Pipe |

## 3.2 Indoor Unit Specifications

| IDU Name | Model | Sound (dB(A)) | Weight(kg) | Dimension(mm) W x H x D | Power Supply | Rated Power(W) | MCA(A) | MFA(A) |
|---|---|---|---|---|---|---|---|---|
| 2-19 | MI2-36GDN1 | 33(SSH) | 11.40 | 990*315*223 | 220-240,50,1 | 30 | N/A | N/A |
| 2-18 | MI2-36GDN1 | 33(SSH) | 11.40 | 990*315*223 | 220-240,50,1 | 30 | N/A | N/A |
| 2-17 | MI2-56GDN1 | 38(SSH) | 12.80 | 990*315*223 | 220-240,50,1 | 45 | N/A | N/A |
| 2-16 | MI2-56GDN1 | 38(SSH) | 12.80 | 990*315*223 | 220-240,50,1 | 45 | N/A | N/A |
| 2-16 | MI2-56GDN1 | 38(SSH) | 12.80 | 990*315*223 | 220-240,50,1 | 45 | N/A | N/A |

| IDU Name | Model | Cooling AT (°C) | Req.TC (kW) | TC (kW) | Req.SC (kW) | SC (kW) | Heating AT (°C) | Req.HC (kW) | HC (kW) | Air flow (m^3/h) | ESP (Pa) |
|---|---|---|---|---|---|---|---|---|---|---|---|
| 2-19 | MI2-36GDN1 | 27.0/19.0 | 0.00 | 3.44 | 0.00 | 2.29 | 20.0 | 0.00 | 2.85 | 656(SSH) | N/A |
| 2-18 | MI2-36GDN1 | 27.0/19.0 | 0.00 | 3.46 | 0.00 | 2.31 | 20.0 | 0.00 | 2.86 | 656(SSH) | N/A |
| 2-17 | MI2-56GDN1 | 27.0/19.0 | 0.00 | 5.42 | 0.00 | 3.29 | 20.0 | 0.00 | 4.55 | 747(SSH) | N/A |
| 2-16 | MI2-56GDN1 | 27.0/19.0 | 0.00 | 5.44 | 0.00 | 3.30 | 20.0 | 0.00 | 4.58 | 747(SSH) | N/A |
| 2-16 | MI2-56GDN1 | 27.0/19.0 | 0.00 | 5.44 | 0.00 | 3.30 | 20.0 | 0.00 | 4.58 | 747(SSH) | N/A |

## 3.3 Outdoor Unit Specifications

| Name | Model | Module | Dimension(mm) | Weight(kg) | Base refr(kg) | Add refr(kg) | Power Supply | MCA(A) | MFA(A) |
|---|---|---|---|---|---|---|---|---|---|
| ODU3 | MDV-V260W/DRN1 | MDV-V260W/DRN1 | 1120*1558*528 | 147.00 | 6.20 | 2.15 | 380-415V-3ph-50Hz | N/A | N/A |

| Name | Model | CR% | Temp(°C) | CC(kW) | Req CC(kW) | Temp(H/RH)(°C) | HC(kW) | Req HC(kW) |
|---|---|---|---|---|---|---|---|---|
| ODU3 | MDV-V260W/DRN1 | 92.31 | 28.0 | 25.26 | 0.00 | -16.0/86% | 19.58 | 0.00 |

| Name | Model | EER | COP | Cooling Power(kW) | Heating Power(kW) |
|---|---|---|---|---|---|
| ODU3 | MDV-V260W/DRN1 | 4.45 | 2.68 | 5.39 | 7.38 |

Req.TC: Required Total Cooling Capacity
Req.SC: Required Sensible Cooling Capacity
Req.HC: Required Total Heating Capacity
TC: Available Total Cooling Capacity
SC: Available Sensible Cooling Capacity
HC: Available Total Heating Capacity
AT: Ambient Temperature
ESP: External Static Pressure
Req.CC: Required Cooling Capacity
CC: Available Cooling Capacity

# 3.4 Piping and Mode Selection Devices

| | |
|---|---|
| IDU Quantity | 5/12 |
| Combination Ratio | 92.31% |
| Additional refrigerant charge | 2.15 kg<br>= 4.50(6.35) * 0.022 + 36.00(9.53) * 0.057 |
| Factory refrigerant charge | 6.20 kg |
| Total refrigerant charge | 8.35 kg |
| Total Pipe Length | 40.5 m / 120 m |
| Furthest Actual | 36.5 m / 60 m |
| Furthest Equivalent | 38.5 m / 70 m |
| Furthest Equivalent from First Branch to IDU | 19 m / 20(40) m |
| Drop Height between IDU and IDU | 0 m / 8 m |
| Drop height between IDU and ODU(Below ODU) | 3 m / 30 m |
| Available Capacity Cooling | 23.32 kW |
| Available Capacity Heating | 19.56 kW |

Note:

1.The equivalent length of each branch joint is 0.5m.

Pipe

| No. | Length | Gas Pipe | Liquid Pipe |
|---|---|---|---|
| (1) | 19.0 m | Ø22.2 | Ø9.53 |
| (2) | 3.0 m | Ø19.1 | Ø9.53 |
| (3) | 8.0 m | Ø15.9 | Ø9.53 |
| (4) | 2.5 m | Ø15.9 | Ø9.53 |
| (5) | 4.0 m | Ø12.7 | Ø6.35 |
| (6) | 0.5 m | Ø12.7 | Ø6.35 |
| (7) | 0.5 m | Ø15.9 | Ø9.53 |
| (8) | 0.5 m | Ø15.9 | Ø9.53 |
| (9) | 0.5 m | Ø15.9 | Ø9.53 |

Branch Joint

| No. | Load kW | Model |
|---|---|---|
| (1) | 24.00 | FQZHN-02D |
| (2) | 18.40 | FQZHN-01D |
| (3) | 12.80 | FQZHN-01D |
| (4) | 7.20 | FQZHN-01D |

# 3.5 Piping Diagram

**VRF 50Hz R410A**

ODU:25.26/19.58 kW IDU Total:23.30/14.56/19.54 kW

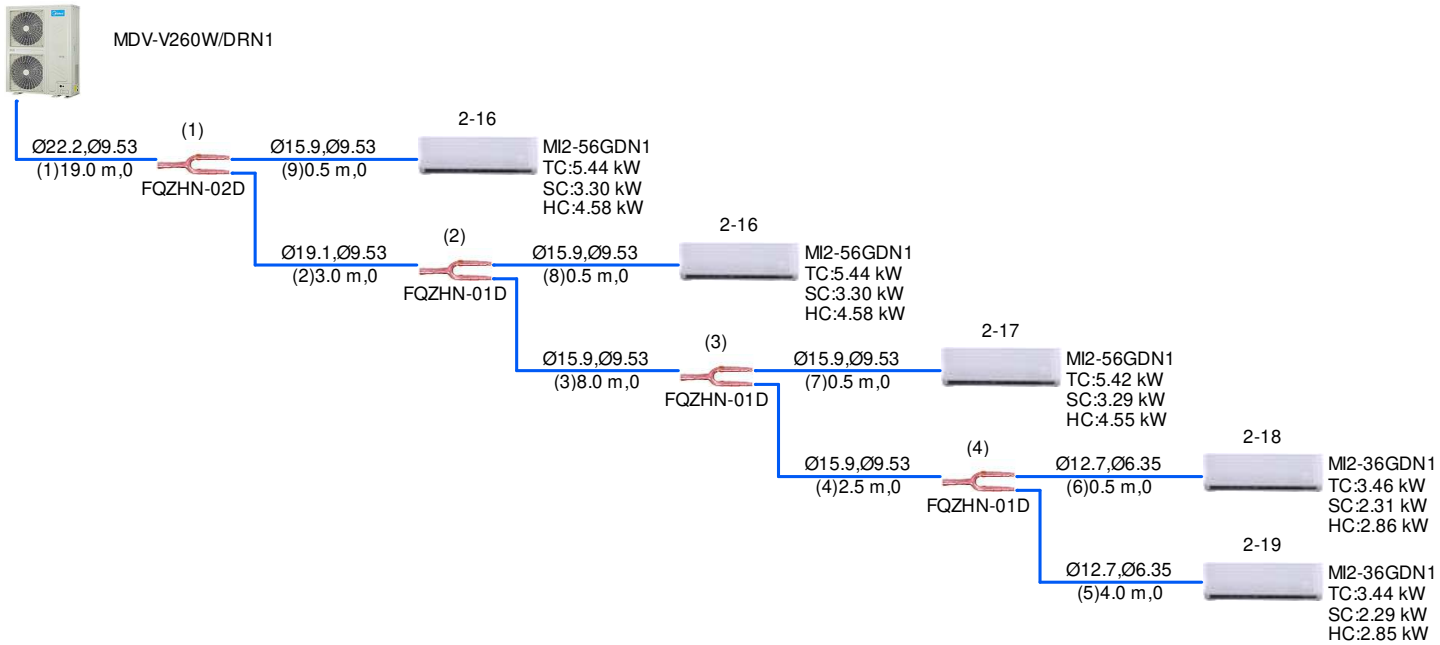


The piping size may be different with the actual situation because of the software's illustration limitation, please confirm the piping size according to the installation manual before installation.

# 3.6 Wiring Diagram

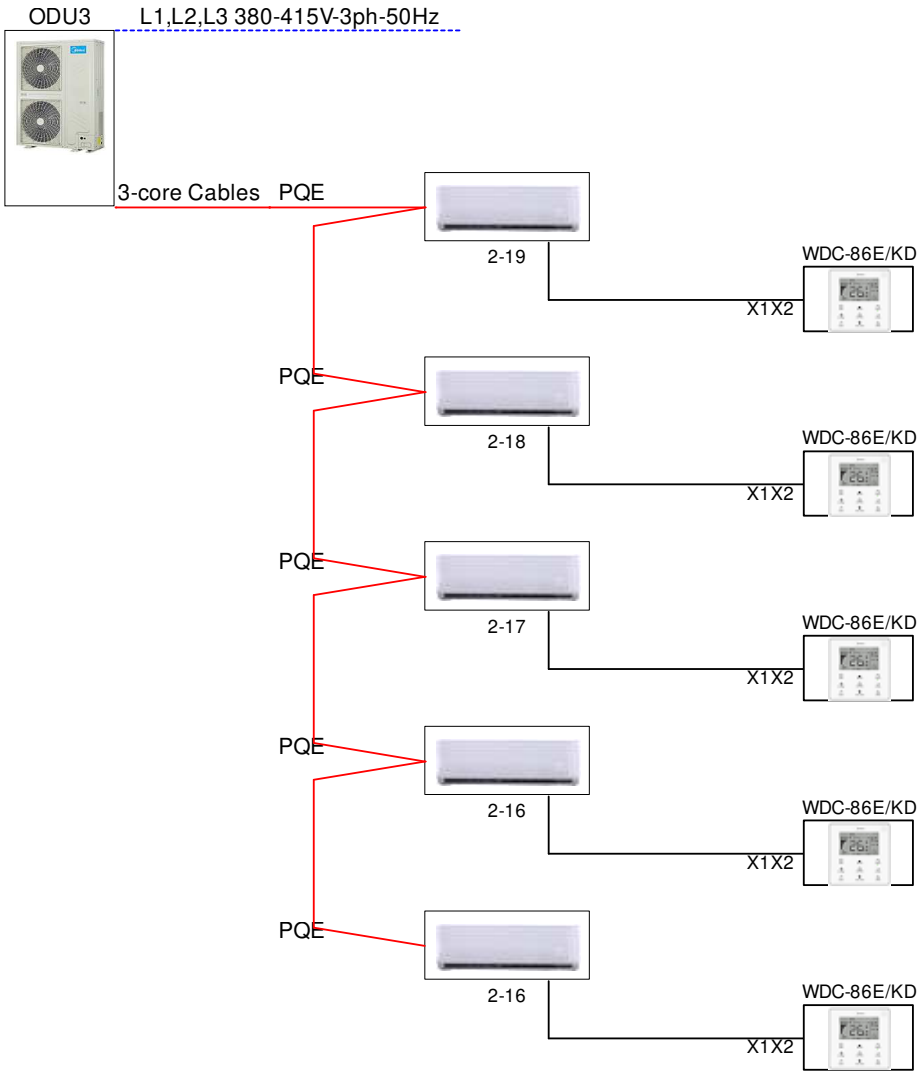


The wiring diagram may be different with the actual situation because of software's illustration limitation, please confirm the wiring diagram according to the installation manual before installation.